OWNER'S OPERATION MANUAL

EZ LOADER BOAT TRAILERS

PRESERVE THE APPEARANCE AND PERFORMANCE OF YOUR EZ LOADER TRAILER WITH THESE EASY-TO-UNDERSTAND GUIDELINES AND RECOMMENDATIONS

NMMA CERTIFIED

QUICK REFERENCE GUIDE

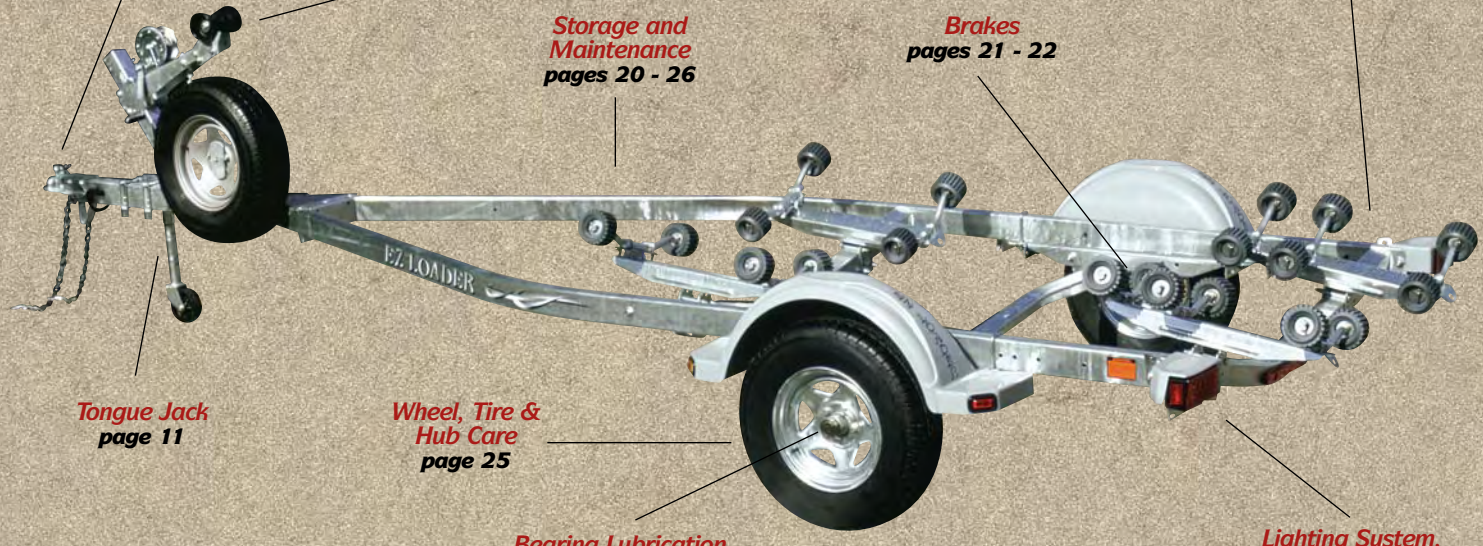

Hitch, Coupler & Safety Chain Information
pages 9 - 10

Winch Adjustment
page 13

Launching and Loading
pages 16 - 19

Storage and Maintenance
pages 20 - 26

Brakes
pages 21 - 22

Tongue Jack
page 11

Wheel, Tire & Hub Care
page 25

Bearing Lubrication & Wheel Seals
pages 25 - 27

Lighting System, Wire Color Chart
page 12

TABLE OF CONTENTS

QUICK REFERENCE GUIDE 2

TABLE OF CONTENTS 3

WARNINGS 4

INTRODUCTION 5

CHOOSING THE RIGHT TRAILER 5
- Weight Capacity 5
- Trailer Length 6
- Bunk vs. Roller 6
- Supporting Your Boat's Weight 6
- Trailer Braking Systems 7

ATTACHING YOUR TRAILER 8
- Hitch Recommendations & Tips 9
- Coupler & Hitch Ball Operation 10
- Using Safety Chains 10
- Tongue Jack Use & Care 11
- Trailer Lights 12

BEFORE YOU TOW 12
- Tying Down Your Boat 12
- Winch Use & Adjustment 13
- Do not Exceed Load Carrying Capacity or GVWR 13
- Tongue Weight & Weight Distribution . .13
- Check Tire Pressure 14
- Check All Nuts & Bolts 14
- Lug Bolt and Nut Tightening Method . .14

ON THE ROAD 15
- Stopping/Following Distance 15
- Hills 15
- Passing 15
- Sway/Fishtailing 15
- Road Shoulders 16
- Backing 16
- Breakdowns & Accidents 16

GETTING IN & OUT OF THE WATER 16
- Roller Trailers 17
- Bunk & Custom Trailers 18
- Common Causes of Boat Misalignment 19

TRAILER MAINTENANCE & STORAGE 20
- Brake Operation & Maintenance 21
- Brake Adjustment 22
- Tire Changing 24
- Jack Placement 24
- Wheel, Tire, & Hub Care 25
- Keep Bearings Lubricated Using the Greased Bearing System 25
- Keep Bearings Lubricated Using the Oil Bath Lubrication System 26
- Changing or Adjusting Bearings 27
- Check Wheel Bearing Seals 27

DEFINITIONS 28

WARRANTY 29
- Warranty Registration 30
- Warranty Questions 30
- Contact Information 30

REPORTING SAFETY DEFECTS 30

REGISTRATION INFORMATION 31

DISTRIBUTOR LOCATIONS . . . . . .Back Cover

Warnings

THE FOLLOWING SIGNAL WORDS AND SYMBOLS ARE USED TO ALERT YOU TO POTENTIAL HAZARDS. OBEY ALL MESSAGES AND INSTRUCTIONS THAT FOLLOW THESE WORDS TO AVOID POSSIBLE INJURY OR DEATH.

DANGER

DANGER indicates an imminently hazardous situation which, if not avoided, will result in death or serious injury.

WARNING

WARNING indicates a potentially hazardous situation which, if not avoided, will result in death or serious injury.

CAUTION

CAUTION indicates a potentially hazardous situation which, if not avoided, may result in minor or moderate injury.

CAUTION

CAUTION used without the alert symbol indicates a potentially hazardous situation which, if not avoided, may result in property damage.

Introduction

We would like to thank you for purchasing the best boat trailer made today, an EZ Loader boat trailer. For over 50 years, EZ Loader has been the industry leader in making quality boat trailers. All EZ Loader Boat Trailers are National Marine Manufacturers Association [NMMA] and Trailer Manufacturers Association [TMA] certified.

Whether you have purchased an adjustable galvanized, powdercoated, aluminum I-beam or custom-welded EZ Loader boat trailer, your new trailer is designed to make loading and launching your boat easier. Read this manual carefully before you use your trailer because it gives details on the trailer you just purchased. Pay attention to and follow all instructions and maintenance procedures in this manual.

We have a large dealer network across the United States, Canada and the world, making service available to you almost everywhere. Distributors for your area are listed on the back cover of this manual. Please call your distributor to find your nearest dealer. Parts and accessories for your trailer can be purchased through your dealer, directly from the EZ Loader parts department or at EZ loader's on-line parts store at www.ezloader.com.

We believe in, and stand behind our product. We know that if you care for your trailer, you will enjoy many years of dependable service from your EZ Loader trailer. Our sincere thanks from everyone at EZ Loader Boat Trailers, Inc.

Choosing the Right Trailer

Weight Capacity

WARNING

DO NOT exceed your vehicle's GVWR

Choosing the right trailer to match your boat is very important. Your trailer not only has to be long enough and wide enough for your boat, but must be able to carry the weight of the boat and everything in the boat, including motor(s), fuel, water, personal gear, and other items that you may have on board. This final weight is called a 'wet weight' and cannot exceed the carrying capacity of the trailer. The GVWR [Gross Vehicle Weight Rating] listed for the trailer, is the maximum amount that the boat and trailer combined can weigh. Do not exceed your trailer's GVWR. If you don't know the weight of the boat when its fully loaded combined with the weight of the trailer, have it weighed.

WARNING

The weight of the boat, as listed in the boat manufacturer's product brochure, may not include the weight of the motors, fuel, water and personal gear and should not be used alone when choosing a trailer.

NMMA CERTIFIED

EZ Loader Boat Trailers is a proud recipient of the Marine Industry Certification (MIC) program sponsored by the National Marine Manufacturers Association.
NMMA certification is your assurance of high quality products produced with strict manufacturing standards and superior service. Always look for the NMMA Certification label whenever you are making a marine product purchase.

Trailer Length

CAUTION

Make sure when the boat is on the trailer, there is enough space between the front of your boat and the back of your tow vehicle.

When choosing a trailer, make sure you take into account the boats true transom to bow length. Some boats have a bow pulpit, an anchor chock or other hardware on the bow of the boat, which can extend several feet forward beyond the bow. The trailer tongue must be long enough to give you enough space between your boat and the towing vehicle, when loading the boat, turning a corner, or backing up so you do not hit your tow vehicle. A less than adequate distance between the boat and towing vehicle may allow them to contact each other causing excessive damage to both. Longer or shorter tongues are available as an option on most models. Shorter winch stand posts are also available as an option on many models and may be necessary for boats with bow pulpits. Measure the length from the transom to the bow eye to make sure the winch stand can be moved forward or backward, as well as high and low, to meet the bow eye and still have the transom of the boat supported by the rearmost rollers or bunks.

Bunk vs. Roller

There are 2 basic types of support systems on boat trailers; bunks or rollers. Bunk style systems have long support bunks, usually made of wood or aluminum, with a carpet or a plastic-like surface. Roller systems generally have multiple sets of rollers to support the hull. Bunk trailers operate best on steep ramps where you are able to submerge the trailer deep enough to partially float the boat off and on the trailer. Roller trailers will function well on either shallow or steep ramps and will allow you to launch and load without putting the trailer in the water as deep as on a bunk style trailer. Some boat manufacturers specify which support system to use with their boats. Please see the "Launching and Loading" section on page 17 for further information.

Supporting Your Boat's Weight

Roller and Bunk boat trailers have different weight distribution characteristics. For roller trailers, your boat should rest evenly on the rollers. Once the rollers on your EZ Loader boat trailer have been adapted to your boat, the patented self-adjusting roller system will carry the weight of the boat evenly. The non-marking cushioned rollers protect your boat surface and supply the needed strength and support. The tongue/keel rollers and the side rollers should be adjusted where applicable. The transom of your boat should rest on the rear most roller. If your transom is left unsupported, severe damage may occur to your boat. Always use tie-down straps or similar approved securing devices to secure the boat to the trailer, as well as the winch strap/cable and safety chains/cables supplied with your trailer. Don't allow the boat strakes to rest on a roller or bunk. Adjust the roller pattern on the left side of the trailer to mirror the roller pattern on the right side. Don't place rear rollers too far apart. If you do, you could hit the rear crossmember during launching or loading. If you suspect an adjustment problem, please contact your EZ Loader Dealer immediately.

Bunk trailer users should make sure that the long, straight bunks evenly carry the boat's weight. If one side of your boat is higher than the other side, adjust the bunks to the same height. The transom of your boat should be even with the back end of the bunk. If your transom is left unsupported,

severe damage may occur to your boat. If bow and center supports are used, make sure that no large amount of pressure is placed on the hull in any one spot, where flexing could occur. As with roller trailers, the bunks and hardware on the left side of your trailer should be the same as on the right side.

Always keep tie–downs tightly fastened. Always use tie-downs or similar securing devices to secure the boat to the trailer, as well as the winch strap/cable and safety chains/cables supplied with your trailer.

WARNING

Some state laws require brakes on trailers with a GVWR of 1,500 pounds or more.

Trailer Braking Systems

EZ Loader Boat Trailers offers three different state-of-the-art braking systems; Hydraulic surge [drum brakes], hydraulic surge [disc brakes], and electric [drum brakes]. All three braking systems offer excellent trailer braking, but each have unique qualities.

Hydraulic Surge [Drum Brakes]

Hydraulic surge drum brakes have been the boat trailer standard for decades. These trailer brakes are dependable and quick to react, are independent of the tow vehicle, and come on automatically when you press the brake pedal in the tow vehicle. As the tow vehicle slows down, the trailer wants to keep moving forward. This moves the brake actuator and applies the trailer brakes. This 'surge' action is where the surge brakes get their name.

Hydraulic Surge [Disc Brakes]

Hydraulic surge disc brakes operate on the same idea as hydraulic surge drum brakes. The disc brake needs a special actuator with a back-up solenoid wired into the tow vehicle's reverse lights. When the tow vehicle is put in reverse, the solenoid locks out the braking system allowing the trailer to back up on level ground without the brakes locking up.

Since you can see most of the disc brake components, they are easy to keep clean and maintain.

Electric [Drum Brakes]

Electric trailer brakes are not hydraulic and are not independent of the tow vehicle. Since this system does not have hydraulic parts, it is easier to install on the trailer. With electric brakes, the driver can adjust the amount of braking on the trailer and can apply the trailer brakes alone by using the brake controller mounted in the tow vehicle. The brake controller is an additional part and must be put in the tow vehicle for electric trailer brakes to work. The brake controller senses when the tow vehicle is slowing down and puts on the trailer brakes. This type of braking system also works when backing up the trailer. In addition to the brake controller in the tow vehicle, electric brakes must have a battery on the trailer in case the trailer is disconnected from the tow vehicle while it is moving.

WARNING

Electric brakes must have a brake controller in the tow vehicle and another charged battery on the trailer.

Attaching Your Trailer

WARNING

Always get help to back your tow vehicle to your trailer. NEVER move the trailer to the tow vehicle.

Before hitching your trailer to your tow vehicle, please check the items listed on the decal located on or near the winch stand. [See Figure 1 on the right]

Your EZ Loader Dealer will provide another decal if it is missing or illegible.

Make sure the coupler lever is up [coupler is open]. Raise the front of the trailer with the tongue jack. Back your tow vehicle close to the trailer, then get out and check the location of the coupler and hitch ball. Move your tow vehicle until the coupler is over the hitch ball. Using the tongue jack, lower the trailer until the coupler completely covers the hitch ball. Lock the coupler [coupler lever is down].

WARNING

Make sure the coupler completely covers the ball and that the ball clamp inside the coupler is below the ball, not on top of the ball. Use a padlock or 1/4 inch bolt and nut to secure the coupler lever in the locked [down] position.

After the coupler is locked on the hitch ball, raise the front of the trailer using the tongue jack. If the coupler comes loose, open the coupler [lever up], attach the coupler to the hitch ball and raise the front of the trailer again. If the coupler will not stay attached, check the hitch ball and coupler for size and damage.

WARNING

Death, serious injury, and / or property damage can result if you do not read and follow instructions in the owner's manual and this decal. Make sure all people towing this trailer read and follow the instructions. If you do not have an owner's manual, contact EZ Loader immediately to get a free replacement.

WARNING

BEFORE TOWING THIS TRAILER CHECK THAT:

- **Coupler and hitch ball are the same size and correct rating.**
- **Coupler is latched (closed).**
- **All safety chains are attached. The trailer safety chains are crossed under the tongue.**
- **All trailer lights are working correctly.**
- **Boat is secured to the trailer front & rear. (DO NOT use winch line alone).**
- **Tongue jack is all the way up and stored.**
- **Wheel lug bolts or nuts are tight.**
- **Tires have correct pressure.**
- **Trailer brakes are adjusted and breakaway cable is attached to tow vehicle.**
- **Load on trailer is within trailer capacity, distributed correctly, and the trailer tongue weight is correct.**

WARNING

This product contains chemicals known to the State of California to cause cancer and other birth defects or other reproductive harm.

CAUTION

You are required to obey local and state laws and regulations regarding brakes, licensing, and additional equipment that is needed for your trailer. Contact your state motor vehicle department for more information.

NMMA CERTIFIED

Fig 1: Trailer Warning Decal

After the coupler is secured to the hitch ball, raise the tongue jack all the way. If you have a swing-up style tongue jack, turn it to the traveling position and make sure the lock pin is secure in the hole. If your trailer does not have a tongue jack, you can buy one at your EZ Loader Dealer or at EZ Loader's on-line parts store at [www.ezloader.com].

WARNING

Make sure the jack is in the stored or traveling position before towing the trailer. If it is not, it can cause the trailer to separate from the tow vehicle.

Cross the safety chains or cables under the tongue and attach them to the tow vehicle. Connect the trailer wiring harness to the lighting system of your tow vehicle. Remember to check your lights. If electric brakes are used, make sure to connect the brake wiring to your tow vehicle's brake wiring.

Spot check all other trailer components [i.e. tires and tie–downs].

You should be all set to go.

Hitch Recommendations and Tips

WARNING

Your trailer's GVWR must not exceed the capacity of your hitch. Be sure you have the right size ball, shank, and capacity to match your trailer's model and coupler size. The correct ball size and capacity is marked on the coupler.

Two types of trailer hitches are normally used: Weight carrying hitches which attach to the tow vehicle and support the trailer tongue weight only, and weight distributing hitches which transfer some of the tongue weight to the tow vehicle by using extra spring bars on each side of the trailer ball.

Bumper hitches are not recommended for boat trailers.

For most boat trailers, a weight-carrying hitch is usually adequate. Weight-distributing hitches are recommended for very heavy loads. Before you decide which hitch to buy, contact your EZ Loader Dealer and read the manufacturer's recommendations for your towing vehicle. EZ Loader does not recommend self-installation of trailer hitches.

If you choose a weight-distributing hitch, contact a dealer specializing in hitches and hitch installation to make sure it is properly installed, that it is compatible with your trailer's brake system and that you don't exceed weight requirements.

WARNING

Do not use weight-distributing hitches with surge-braked trailers. Overloading or improper installation of weight-distributing hitches may not let hydraulic surge brake actuators work and the tow vehicle and trailer may take longer to stop.

Several models of weight distribution hitches will render the brakes inoperative. EZ Loader cannot assume responsibility or accept warranty claims in such instances. Please make sure the weight distribution hitch you choose is compatible with the trailer's braking system. EZ Loader now offers a state-of-the-art electric cab-controlled braking system that will not be impaired with the use of weight distributing

hitches. Please go to www.ezloader.com for additional information.

WARNING

For proper load distribution on tandem and triple torsion axle trailers, it is very important that the trailer is parallel to the ground while towing.

Please Note: Hitch ball height is determined by measuring from the ground to the top of the coupler ball housing when the trailer is on a level surface. The average height to the top of the hitch ball is usually from 14 inches to 21 inches above the ground when loaded. Actual height will vary from trailer to trailer.

Coupler and Hitch Ball Operation

WARNING

Do not use a different size ball, shank, or capacity than recommended and be sure both the hitch ball and hitch ratings are the same or more than the Gross Vehicle Weight Rating of your trailer.

Every coupler on an EZ Loader boat trailer is permanently marked with;

a] Manufacturer's code, name or trademark;

b] SAE coupling designation and gross coupler rating;

c] Part number or style model; and

d] Proper ball diameter.

Loosen or tighten the nut on the bottom of your coupler so the latch closes firmly with a tight fit on the ball. Class IV Couplers and hydraulic brake actuators usually need no adjustments. Keep the latch mechanism clean and lightly oiled.

If the latch mechanism or coupler is bent or deformed in any manner, do not use the trailer until a new latch assembly or coupler is installed. Replacement assemblies and rebuild kits are available at your EZ Loader dealer or at EZ Loader's on-line store at www.ezloader.com.

Fig. 2: Coupler on ball with latch in proper lock position.

Using Safety Chains

WARNING

Always attach the trailer and boat bow safety chains before towing.

Your trailer hitch should have a place to attach the trailer safety chains or cables. Crisscross the trailer safety chains or cables under the trailer tongue before attaching to the towing vehicle. [See Figure 3] Most state laws require the crisscrossing of these chains or cables. This may prevent the trailer tongue

from falling to the road in the event that the trailer coupler becomes detached from the hitch ball. Do not connect the trailer safety chains or cables together.

Original trailer safety chains or cables should not be removed or tampered with. Should you need to replace them, contact EZ Loader or your EZ Loader Dealer for replacement chains or cables and hooks.

Note: Some States/Provinces require closed connections on trailer safety chains or cables. Check with your State/Province for specific regulations regarding closed connections on trailer safety chains or cables.

Fig 3: Proper attachment of the safety chains is essential to trailer safety. Note how the safety chains are crisscrossed.

Tongue Jack Use and Care

Place the jack into position, crank the jack handle until the trailer coupler is high enough for the coupler to go over the hitch ball and lower the trailer coupler onto the ball by cranking the jack handle in the opposite direction.

⚠ WARNING

Back your tow vehicle to your trailer. DO NOT move your trailer to the tow vehicle. When the trailer is moved without a tow vehicle, the brakes do not work.

If your jack is a swing up type, return it to its stowed [up] position, making sure the securing pin is firmly in it's hole. [See Figure 4] If your jack is not a swing-up type, retract your trailer jack completely [wheel raised as high as possible] before towing the trailer.

⚠ WARNING

Care must be used when engaging or disengaging a swing-up style tongue jack.

When using the jack in the down position to support weight, make sure the securing pin is firmly in it's hole before adding any weight to the jack. If the securing pin is not firmly in it's hole, the jack may collapse under the weight placed on it. While towing, if your jack is not folded up or retracted completely, damage could result and your jack may have to be replaced.

Like the winch, or any kind of mechanical assembly, a jack requires lubrication maintenance. Regularly grease the drive gear, and rack & pinion – and oil the caster and wheel bearings.

Fig 4: Swing jack in traveling position.

Trailer Lights

WARNING

Always check your trailer lights to make sure they are in working order before any trip.

If your trailer has electric brakes, unplugging the trailer wire from the tow vehicle will disable the trailer brakes.

Your EZ Loader boat trailer is equipped with the best lighting system available. Always double-check your lights to make sure they are in working order before any trip.

Twice a year, it is a good idea to trace the wiring system from the tow vehicle to your boat trailer's taillights and look for bare wires, cracked insulation or corroded terminals. Always be sure the white ground wire is connected to the trailer frame. Replace all worn or damaged parts.

Waterproof grease, petroleum jelly, or WD-40® should be put on plug contacts and bulb bases to prevent rust and corrosion.

Tow vehicles with three-light lighting system [different lights for brake, turn, and tail lights] need an adapter to change the three-light system to a two-light system. Make sure your vehicle is equipped with the proper lighting package. We recommend that a professional, i.e. your automotive dealer, install it for you. EZ Loader's Wire Color Code is listed to the top right at Figure 5.

Even though your lights are submersible, it is still advisable to always disconnect the light harness prior to submerging the trailer.

Wire Color Code

Yellow and Brown	Left
Green and Brown	Right
Brown	Tail lights, rear marker light, front and rear side lights
Yellow	Left stop and turn
Green	Right stop and turn
White	Ground
Blue*	Underwater lights

* Custom trailers only

Fig 5: EZ Loader Wire Color Code

Before You Tow

Tying Down Your Boat

WARNING

Always attach the boat bow safety chains. Make sure the boat is secure and held in place before towing.

Tie down the boat securely at the stern, in both a downward and forward direction, with approved tie downs. Use the rear tie-down points provided on your trailer.

A boat bow safety chain is provided on most EZ Loader models and should be attached to the bow eye of your boat after the winch firmly pulls the boat against the bow stop. Do not depend on the winch line, strap or cable alone to hold your boat secure.

Check the winch line, strap or cable for fraying, cuts or tears. If it is damaged, replace it immediately.

If the winch line and tie–downs are tight and you are still able to rock the boat on the trailer, check the settings of the bunks and/or rollers and winch adjustment.

Winch Adjustment and Use

WARNING

Never disengage the winch ratchet lock while winching your boat onto the trailer.

Whether your winch is a hand-operated model [standard] or an electric model [aftermarket], both can be adjusted for the best possible performance. The winch height should be adjusted so that the winch cable/strap is level with the bow eye of the boat when the boat is resting on the trailer, with the bow stop roll or vee block just above the bow eye of the boat. Your boat will then be pulled in a straight line onto the trailer and against the bow stop on the winch stand. The angle the winch is pulling your boat should not make the boat lift up or pull down when pulling the bow eye against the underside of the bow roller or vee block. It should pull the bow eye straight into the underside of the bow roller or vee block. [See Figure 6]

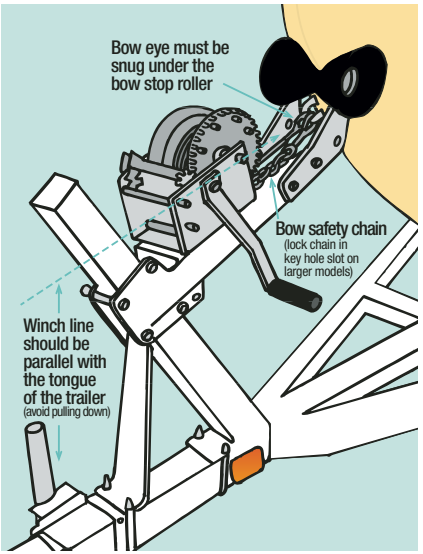

Fig 6: Proper winch operation

Maintenance of the mechanical winch is simple. Keep clean, lubricate regularly and apply heavy grease to the gears frequently. Make sure the winch line, strap or cable doesn't rub against anything sharp; fraying and wear could result. If your line, strap or cable becomes worn, contact your EZ Loader Dealer for replacement as soon as possible or visit EZ Loader's on line store at www.ezloader.com

Do not Exceed Load Carrying Capacity or GVWR

WARNING

Make sure the total weight of the trailer, boat, engine, fuel, batteries, and gear does not exceed the trailer's GVWR.

The weight capacity of your trailer is found using the Gross Vehicle Weight Rating [GVWR] of the trailer. The GVWR is printed on the Vehicle Identification Number [VIN] decal at the left front of the trailer. If you do not know the weight of your trailer with boat, motor[s], fuel, gear, etc., have it weighed. [See SCALES in the yellow pages.] The trailer must not be connected to the tow vehicle when you get the total weight of the trailer. It is up to you to make sure the weight of your boat, trailer, and boat cargo does not exceed the GVWR.

Tongue Weight & Weight Distribution

WARNING

Poor weight distribution can cause trailer sway ["fishtailing"] and put extra force on your boat, trailer, towing equipment, and tow vehicle.

Proper load distribution on your trailer is also very important. Five to ten percent of your trailer's Gross Vehicle Weight should be supported by the hitch ball, with the tongue level. This is called "tongue weight". For example, if the GVW of the boat, gear and trailer is 1,500 lbs., the weight on the coupler should not be more than 150 lbs. – or the maximum rating of the hitch [whichever is less] – or be less than 75 lbs. For lighter boats, a small scale [like a bathroom scale] can be used to check the weight on the coupler.

If you are over or under the standard weight distribution, try moving gear inside your boat first. If further adjustment to the trailer is necessary, contact your EZ Loader Dealer.

WARNING

Your trailer's GVWR must not exceed the capacity of your hitch.

CAUTION

Check with your EZ Loader Dealer or automotive dealer to make sure you have the proper towing vehicle for the load you'll be pulling. Check your vehicle manufacturer's hitch weight recommendations as well. Be sure you have the right size ball, shank and capacity to match your trailer's model and coupler size. The correct ball size and capacity is marked on the coupler.

Check Tire Pressure

WARNING

Keep your tires inflated to the recommended tire pressure on the VIN decal [found on the left front of your trailer]. Check the tire pressure before each trip.

Tire Description	PSI	Capacity
20.5X8X10B	35	905lbs
20.5X8X10C	50	1105lbs
20.5X8X10D	70	1330lbs
20.5X8X10E	90	1535lbs
480X12B	60	780lbs
480X8B	60	590lbs
530X12B	55	840lbs
530X12C	80	1045lbs
ST175/80R13B	35	1100lbs
ST175/80(R or D)13C	50	1360lbs
ST185/80(R or D)13C	50	1480lbs
ST205/75R14B	35	1430lbs
ST205/75(R or D)14C	50	1760lbs
ST215/75(R or D)14C	50	1870lbs
ST225/75R15D	65	2540lbs
ST235/80R16D	65	3000lbs

Fig 7: Tire pressure chart

Check All Nuts and Bolts

Even though EZ Loader uses self–locking, vibration resistant nuts, it is the owner's responsibility to make sure all of the fasteners are tight before using the trailer – not just the first time you use it, but on a regular basis.

Lug Bolt or Nut Tightening Method

WARNING

Check your lug bolts or nuts for tightness before every trip.

If you lose a lug bolt, replace it promptly with the correct size. Use 60 degree cone angle zinc plated lug bolts.

Initially tighten to 12-20 foot pounds, using a tightening sequence on a 5 bolt wheel of 1,3,5,2,4 or on a 6 bolt wheel 1,4,6,3,2,5 – see Figure 8.

Finish torquing to 90-95 ft. lbs. or lug nuts to 85 foot pounds. Re-torque after 50 miles of use and on a periodic schedule from then on. Lug bolts or nuts should be clean and dry. Do not put grease or other lubricant on them.

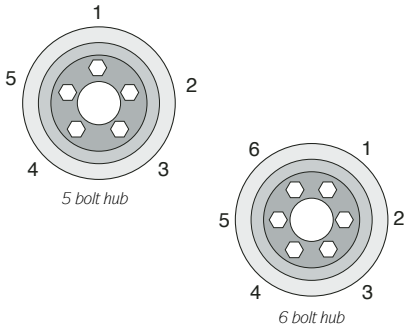

Fig 8 *Lug bolt order*

On the Road

EZ Loader recommends all people wear appropriate safety restraints at all times while towing with any vehicle.

Going too fast is a major cause of vehicle-trailer accidents. At a minimum, observe the posted speed limits. Slow down for curves, bad weather, hazardous road conditions and expressway exits. Do not feel secure if your trailer tows easily at higher speeds. A road hazard that could be avoided at 45 or 50 mph, may not be at 55 mph.

Stopping/Following Distance

Your tow vehicle and trailer are heavier and longer than your tow vehicle alone. This means it will take you longer to stop. Allow at least 4 seconds between you and the vehicle in front of you. Start counting when the back of the vehicle in front of you passes a fixed object, such as a signpost, telephone pole, or crack in the road. If the front of your vehicle reaches the object before the end of the 4 seconds, slow down to increase the distance. Then check the following distance again. If you are driving in bad weather, such as rain, snow, or fog, use at least a 5 second gap.

Hills

To prevent your tow vehicle's engine from lugging when going up hills, shift into lower gears. This will improve gas mileage and reduce engine overheating.

Swaying or "fishtailing" happens more often going downhill. To prevent this from happening, decrease speed BEFORE going down the hill. If your trailer has surge brakes, do not shift into lower gears when going downhill. This can make the trailer brakes come on the whole time you are going downhill and may cause your trailer brakes not to work.

DO NOT ride the brake pedal going downhill. When you need to slow down, press the brake pedal and slow down at least 5 mph below the speed limit. Then let completely off the brake pedal and let the brakes cool before you press the brake pedal again.

Passing

Your tow vehicle and trailer are heavier and longer than your tow vehicle alone and you will need more time and distance to pass.

Passing by another vehicle in the same or opposite direction can cause sway or fishtailing. This sway is greater when your speed is higher. See the SWAY/FISHTAILING section below on what to do if this happens.

Sway/Fishtailing

One or more causes [cross winds, passing vehicles, quick driver steering actions, improper loading, excessive speed, etc.] may result in sway.

During sway, applying your brakes or turning the steering wheel can cause a jackknife, loss of control or both.

If sway happens:

- ⚠ Let off the gas pedal. NEVER speed up to try to control sway.
- ⚠ DO NOT apply your brakes.
- ⚠ Steer straight ahead, enough to keep in your lane. DO NOT try to control sway by turning the steering wheel.

After the swaying has stopped:

- ⚠ Pull a safe distance off the roadway and stop. Get all the occupants out and away from the vehicle.
- ⚠ Check the cargo in your boat to make sure it has not shifted. Also make sure the trailer is loaded heavier in the front.
- ⚠ Check that all the tires are properly inflated and all lug bolts or nuts are tight.
- ⚠ Check the trunk or cargo bed of the tow vehicle to make sure it is not overloaded.
- ⚠ DRIVE AT A SLOWER SPEED. Sway happens most often at higher speeds.

Road Shoulders

Sometimes the trailer is wider than the tow vehicle. Drive in the center of the lane to allow for a wider trailer.

If wheel[s] of your vehicle or trailer go off the paved roadway:

- ⚠ Hold the steering wheel firmly.
- ⚠ Let off the gas pedal and slow down below 25 mph.
- ⚠ DO NOT apply the brakes.
- ⚠ DO NOT turn the steering wheel sharply.
- ⚠ After slowing down below 25 mph, gradually turn the steering wheel just enough to get you back on the roadway.
- ⚠ Proceed with caution when entering traffic.

Backing

To back your trailer, keep your hand at the bottom of the steering wheel. To move the trailer left, move your hand left. To move the trailer right, move your hand right. If your tow vehicle and trailer starts to jack-knife, or isn't headed where you want it, STOP. Pull forward to straighten out, and then start again.

Breakdowns & Accidents

Get Off The Road

If something goes wrong and you need to get off the road, immediately park your tow vehicle in a safe place, as far away from the road as possible. Turn on your emergency flashers. Get all the occupants out of the vehicle and away from the roadway.

If you must continue on the road to reach a safe place off the road, turn on your emergency flashers, slow down, and proceed with caution.

Do not hesitate to drive on a flat tire if it is necessary to reach a safe place completely off the roadway. Drive slowly, since the scraping tire and wheel could cause a fire.

Getting In and Out of the Water

The handling of your boat and trailer at the ramp requires practice, skill and patience. With care and attention to the following tips, you can launch and load your boat with relative ease.

Always prepare the boat for launching before you get to the ramp. Stop in a launching prep area near the ramp that doesn't block traffic and remove your tie–downs, tilt up your engine or drive unit, replace your transom drain plugs, etc.

Do not disconnect the wiring harness, winch cable or boat bow safety chain until you are by the water, ready to launch.

You do not need to disconnect the electric trailer brakes before launching the boat. If you disconnect the electric trailer brakes, the trailer brakes will not work.

WARNING

If the winch handle slips out of your hand, let it spin. DO NOT try to stop it.

Bunk style trailers with composite or plastic surfaces on the bunks [such as Channel Glide Bunk Covers] are very slippery. Extra caution should be taken while removing the winch strap/cable and safety chains as the boat may start to unload at that same moment.

EZ Loader manufactures both "Roller" type trailers and "Bunk" type trailers. Please follow the launching and loading directions for the type of trailer you purchased.

Roller Trailers – Launching and Loading

With EZ Loader's unique roller technology, you have one of the easiest ways in the world to launch and load your boat. Back the trailer down the ramp to the water. [See Backing section on page 16] If there isn't a ramp available, use a solid area of ground next to the shore, with a slope if possible. Avoid wet, soft sand.

With your boat & trailer backed down to the water and in a 'launch-ready' position, remove the boat bow safety chain from the boat. Hold the winch handle securely, reverse the winch lock and begin unwinding the line. Unwind it slowly and carefully.

Do not put your trailer wheels and brakes in the water if possible, especially in salt water. Flush kits for drum brakes will help increase the life of the brake components in salt-water areas. These kits are available from your EZ Loader Dealer or at the on-line store at [www.ezloader.com]. Tie a mooring line to the boat to help you control it in the water.

WARNING

If the winch handle slips out of your hand, let it spin. DO NOT try to stop it.

On an average grade ramp, the rollers on your trailer will allow your boat to gently roll back into the water. Do not remove the boat bow safety chain or winch lock until the boat and trailer are located in "launch" position.

If your boat doesn't immediately move, try unwinding about six inches of line, lock your winch and give the boat a push. Then unlock the winch and try again. Your boat should roll safely into the water.

Launching Checklist

In the Parking Area

- Remove the trailer-to-motor supports.
- Remove tie-downs.
- Load and store gear that goes on boat.
- Check all systems, including your boat's engine, blower, bilge pump and lights.
- Disconnect trailer wiring from car. *[**Leave the wiring attached** if you have EZ Loader cab-controlled electric brakes. Disconnection will eliminate braking capability.]*
- Remember to properly install all drain plugs.

At the Ramp — in Launch Position

- Disconnect the bow safety chain hook from the bow eye.
- Follow launching instructions.
- Always practice good boating safety.

When loading, always prepare for the procedure prior to reaching the ramp. If the ramp is busy, preparation will shorten the time it takes for you to get your boat out of the water.

Make sure your engine or drive unit is in the full up position. Just as in the launching procedure, do not put your trailer wheels or brakes in the water, if possible. For the self–adjusting and centering rollers to work properly, they must not be too far under water. [See Figures 9, 10 and 11 below]

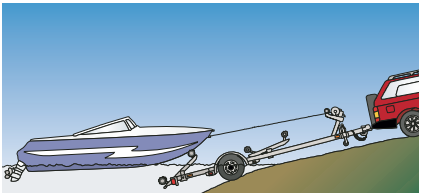

Fig 9: Launching from a Roller Trailer on a steep ramp

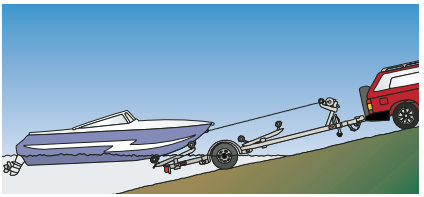

Fig 10: Launching from a Roller Trailer on an average grade ramp

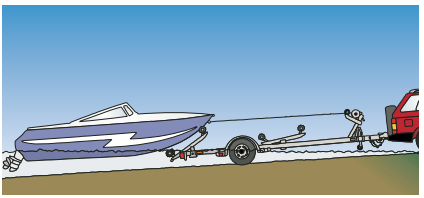

Fig 11: Launching from a Roller Trailer on a shallow ramp

Loading Your Boat

Unlock your winch and unwind enough cable/strap to attach the hook to the bow eye of your boat. For safety, always keep at least three turns of cable/strap around the winch drum. Never let your cable/strap all the way out. Lock your winch before attempting to wind the cable/strap in.

Thanks to EZ Loader's marvelous roller technology, you don't need to have the boat in perfect alignment with the trailer. Fasten the boat to the winch line and start winding. The self–adjusting rollers will automatically center your boat and align it to its correct angle. Strong wind and current can affect the automatic adjusting capability of your roller trailer, so be aware of those conditions while loading. Optional load guides can help you keep your boat centered in adverse conditions. Pull the bow eye tight to bow roller or vee block. Connect the boat bow safety chain and you are ready to drive to the loading/preparation area near the ramp to connect all other tie–downs, lighting or electric brake connections, etc.

Bunk or Custom Trailers — Launching & Loading

Launching Checklist

In the Parking Area

- Remove the trailer-to-motor supports.
- Remove tie-downs.
- Load and store gear that goes on boat.
- Check all systems, including your boat's engine, blower, bilge pump and lights.
- Disconnect trailer wiring from car. *[**Leave the wiring attached** if you have EZ Loader cab-controlled electric brakes. Disconnection will eliminate braking capability.]*
- Remember to properly install all drain plugs.

At the Ramp — in Launch Position

- Disconnect the bow safety chain hook from the bow eye.
- Follow launching instructions.
- Always practice good boating safety.

You can rest assured that your new **EZ Loader** bunk style adjustable, custom-welded, or aluminum trailer is engineered to provide the easiest launching/loading experience possible.

Back the trailer down the ramp until there is enough water to make the boat float. Because the bunks generate more friction than rollers, you need to back the trailer further into the water. Tie a mooring line to the boat so you will have control once it is floating.

Unfasten the boat bow safety chain. Hold the winch handle securely, reverse the winch lock and begin unwinding the line. Unwind it slowly and carefully.

⚠ WARNING

If the winch handle slips out of your hand, let it spin. DO NOT try to stop it.

On an average grade, the bunks on your trailer will allow your boat to gently slip back and float into the water. If your boat doesn't immediately move, try unwinding about six inches of line, lock your winch and give the boat a push. Then unlock the winch and try again. If this doesn't work, you might try backing the trailer in deeper, if possible. [See Figure 12]

Care should be given when launching from trailers with bunks that are equipped with Channel Glide Bunk Covers or other plastic-like materials. These materials make the bunk surfaces very slippery, and the boat may begin to unload as soon as tension is released on the winch cable/strap.

If the boat will still not unload, it is likely that your trailer needs adjusting. Contact your **EZ Loader Dealer** as soon as possible.

When loading, always prepare for the procedure prior to reaching the ramp. If the ramp is busy, preparation will shorten the time it takes for you to get your boat out of the water.

You probably won't have to back the trailer into the water as far to load the boat as you did to launch it. In fact, the easiest way is to back your trailer up until the rear of the bunks are in the water. By not putting your trailer too deep in the water, your boat will actually center itself on the bunks about 1/3 to 1/2 the distance onto the trailer.

Connect the winch cable/strap to the bow eye of the boat. Lock your winch before attempting to wind the cable/strap in. Once your boat is aligned and is pulled firmly against the winch stand roller or vee block and your winch is in the locked position, connect the boat bow safety chain and you are ready to drive to the loading/preparation area near the ramp to connect all other tie–downs, lighting or electric brake connections, etc.

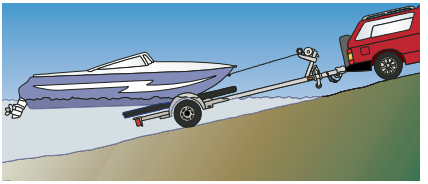

Fig 12: Launching from a Bunk Trailer on an average grade ramp

Common Causes of Boat Misalignment

If your boat doesn't sit level in the water or your bunks or rollers are not adjusted properly, you may have misalignment problems with your boat when loading. Basic correction procedures are as follows:

Correction Procedures:

1. Re-measure all roller assemblies that set in a line across from each other. Make sure the distance to each roller from the center-line of the trailer is equal. In other words, the left side of your trailer should be exactly the same as the right side. This is true of bunk or roller trailers.

2. If your boat keeps going to the port [left] side, remove the boat and loosen the U–bolts and/or the through bolts that clamp the roller assemblies on the stern [back] section of the trailer. Force each assembly to the right as if you were trying to turn the handlebars of a bicycle. Hold each assembly in this turned position and retighten the U–bolts and/or through bolts.

This repositioning of the roller assemblies should correct the misalignment of the boat on your trailer. If your boat goes toward the starboard [right] side, reverse the procedure.

3. Another common reason for boats not centering themselves is putting the trailer too deep in the water, which does not allow the trailer adequate time to center the boat. This is especially true on roller style trailers. If problems persist, contact your EZ Loader Dealer as soon as possible.

Please Note: Make sure your trailer is not too deep in the water or the boat will float over the rollers and be difficult to load and center.

Trailer Maintenance and Storage

One of the best maintenance procedures for your trailer is washing the trailer with soap and rinsing with fresh water after every use. This will help prevent rust and give your trailer that "showroom" appearance for a long time.

People often forget to give their trailer the same waxing care as their car, but if you want your trailer to last, wax it on a regular basis. Touch up all scratches and spots of rust as soon as they occur. Matching paint can be obtained at your EZ Loader Dealer.

Check your tire pressure [when tires are cold] and make sure they are inflated to the correct pressure. [See tire pressure chart on page 14, Figure 7]

Every trip, check your lug nuts or bolts for tightness on your wheels. Once a year, or every 2000 miles, whichever comes first, check your hub bearings [see pages 25-27]. Check your light wires and electric brake wiring [if applicable] for damage, and make sure they do not hang down where they could be caught.

Flush kits are available for drum style brakes and will help to keep the brakes clean, especially in saltwater or brackish water usage areas.

A handy hint: A little petroleum jelly in the light bulb sockets creates a better seal, prevents corrosion and makes it easier for replacement, if ever necessary. L.E.D. lights require no maintenance.

Periodically grease the shafts of the rollers and roller assembly [if you have a roller trailer] and lubricate the winch latch assembly and gears. Watch for frayed cables, straps or ropes and replace them as soon as possible.

For off–season storage, park your boat and trailer in a protected area, such as a garage or carport. Do not put plastic bags around your light fixtures – condensation will occur and cause corrosion.

While your boat is in storage, it is a good time to touch up any rust spots, nicks and chips on your boat and trailer. Galvanized trailers occasionally show small rust spots, so touch up those spots with cold galvanizing spray paint, available at most paint stores.

A little trailer maintenance goes a long way in preserving the appearance and performance of your trailer. Please follow our recommendations. We want you to have your EZ Loader boat trailer for a long, enjoyable time.

CAUTION

Boat bottom cleaners containing muratic or other acids have a highly corrosive effect on both painted, galvanized or aluminum trailers and should not be allowed to contact the trailer.

Brake Operation and Maintenance

CAUTION

In many states, trailers with a GVWR of 1500 lbs. or more are required to have brakes on all wheels.

Contact your state motor vehicle department and your EZ Loader Dealer for the trailer brake requirements in your area.

Your brakes will last longer if you do not get them wet. If they become submerged, you should run the trailer for ten minutes before applying the brakes. This "dries out" your brakes faster than parking the trailer for a day. A brake flush kit is recommended for boat trailers subject to saltwater or brackish water situations.

Test your brakes prior to each trip and after your trailer wheel bearings have been lubricated. Inspect your trailer brakes on a regular basis, adjust if necessary, and replace any damaged or worn parts. Your EZ Loader Dealer can also inspect your brakes.

Trailer brake manufacturers recommend that when the boating season is over, the brake drums should be removed and the brake assembly should be inspected.

All parts should be clean, dry and free from corrosion.

An EZ Loader Dealer can check the brakes, clean the shoes, backing plate and the rest of the parts. A rust inhibitor product application is often suggested by manufacturers. Reassemble drum and wheel components.

EZ Loader recommends trailers with drum brakes to be inspected and a rust inhibitor applied at least once a year.

With hydraulic brakes, do not shift to a lower gear and use your engine as a brake when going downhill. This could activate the trailer's brakes continuously for the duration of the downhill run, causing overheating and fading to the point of possibly losing your trailer's braking ability completely.

A better way is to slow down as you approach the top of the hill, and maintain an even, slow, controlled downhill speed with repeated applications of your tow vehicle's brakes, allowing enough time in between for the brakes to cool off.

Fig 13: Hydraulic Drum Brakes

Fig 14: Hydraulic Disc Brakes

Fig 15: Electric Brakes

Brake Adjustment

WARNING

Drum style brakes are NOT self-adjusting brakes and will require regular checking and adjustment from time to time to make sure they operate properly.

WARNING

Using pads and shoes without enough brake lining material can result in brake damage, create excessive heat, and cause the brakes not to work correctly.

WARNING

Make sure the trailer is not allowed to move. Attach it to the tow vehicle and block the tires when servicing the brakes.

Only a qualified mechanic trained in the repair and maintenance of braking systems should attempt brake adjustment, repair, and replacement. To make the brake adjustments to your EZ Loader trailer, follow the method explained below. If you are not sure about making these adjustments, your EZ Loader Dealer can make these adjustments for you. See the Jack Placement section on page 24 for instructions on jack placement.

For Hydraulic Drum Brakes

1. Raise the trailer wheel so it can turn freely.

2. Locate and remove the dust cover from the adjusting slot on the lower back of the brake backing plate.

3. Locate the brake adjusting screw [called a star adjuster] through the adjusting slot and insert a brake adjusting tool. Adjust the brake shoes out [tighten by turning the star adjuster down on the left side drum and up on the right side drum] until tires will not turn by hand, then back off [loosen by turning the star adjuster up on the left side drum and down on the right side drum] the adjustment until the wheel turns freely, usually 8 to 10 clicks. Rotate the drum in the direction of forward rotation only. [See Figure 16]

4. If properly adjusted the drum should turn freely and have a barely audible sound of the shoes against the drums. This indicates that the shoes are in contact with the drum, but not dragging a lot.

WARNING

The star adjuster can disconnect from the brake and fall to the bottom of the brake drum if you loosen it too much. This will cause damage to the brake and will not let the brakes work properly.

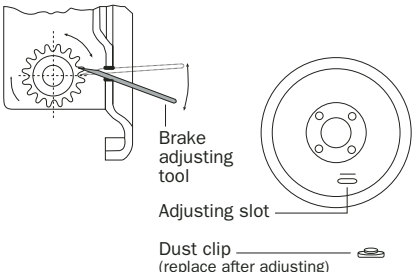

Fig 16: Brake Adjustment

Trouble-Shooting Hydraulic Brakes

SYMPTOM	SOLUTION
BRAKE NOISE	
Shoe chatter, lining coated with grease or oil.	Locate cause of grease or oil leakage, reline and grind for proper lining–to–drum contact.
Vibration with loose bolts, out–of–round drums.	Tighten hub bolts or nuts and recondition or replace drums.
Vibrations with loose bearing adjustment or rough bearing.	Adjust or replace bearings and races.
Worn/cracked drums or machined beyond oversize limits.	Replace drums.
EXCESSIVE TRAVEL OF ACTUATOR	
Leaks in hydraulic lines.	Replace defective lines.
Low fluid in master cylinder reservoir. Air in hydraulic lines.	Refill master cylinder and bleed system.
Leaking wheel cylinders.	Repair or replace.
Leaking primary cup in master cylinder. Ports closed or restricted with dirt. Defective hoses. Leaking check valve fails to keep hydraulic system preloaded.	Check problem components and adjust, repair or replace as required.
Excessive lining–to–drum clearance.	Adjust brakes or replace linings.
PRESSURE BUILD–UP IN SYSTEM	
Contaminated fluid causing cup swelling.	Drain, flush and replace fluid. Replace cups.
Master cylinder piston fails to stop and keeps the compensating port closed.	Check all components and adjust, repair or replace as required.
Hose or cylinder ports are closed or restricted with dirt. Weak return spring.	Overhaul or replace.
HEAVY CLUNKING SOUND FROM ACTUATOR	
Leaks in hydraulic lines.	Replace hydraulic lines.
Low fluid in master cylinder.	Refill master cylinder and bleed system.
If no hydraulic leaks & good fluid level	Replace shock absorber.

Periodic Brake Adjustment

1. Adjust trailer brakes after the first 1000 miles of use.

2. Trailer brakes should be inspected and adjusted at the beginning of each boating season, or every 2000 miles, whichever comes first.

3. Wheel bearings and seals should also be inspected at this time.

For Disc Brakes

Adjustment is not necessary on EZ Loader's disc brakes. Make sure the brake parts are free from rust and debris. Check brake pads periodically to make sure there is a proper amount of lining left. Check the brake fluid and make sure it is full before every trip.

Only a qualified mechanic trained in the repair & maintenance of braking systems should attempt brake adjustment, repair and replacement.

Tire Changing

CAUTION

Make sure you are on solid footing and level ground when changing tires.

Replace your trailer tires promptly if they become worn or damaged. If within the warranty period, contact the tire manufacturer for an adjustment. You can get a spare tire at your EZ Loader Dealer. We also recommend that you carry a jack, such as a small hydraulic jack, for tire changes.

Getting your hands in tight places under the fender can cause accidental pinching. We recommend wearing gloves while changing tires. After the tire is changed, be sure to re-torque the lug bolts or nuts as mentioned in the "Torque Procedure" section.

To change a tire, make sure the trailer is not allowed to move. Attach it to the tow vehicle and block a tire on the opposite side.

Jack Placement

WARNING

Make sure the trailer is not allowed to move. Attach it to the tow vehicle and block the tires.

On tubular steel type trailers, the best place to put your tire jack is under the axle where the spring mounts to the axle. On a torsion axle trailer, place the jack under the axle tube as near the tire as possible, but not on the torsion arm. If the jack will not fit under the axle, place it under the main frame rail [boom] as close to the axle as possible. On aluminum I-beam trailers, the only allowable place to place the jack is under the axle as mentioned above.

EZ Loader wheel sizes are as follows:

Spare Wheels	
8" 5 Hole -	4 1/2" Bolt Circle
10" 5 Hole -	4 1/2" Bolt Circle
12" 5 Hole -	4 1/2" Bolt Circle
13" 5 Hole -	4 1/2" Bolt Circle
14" 5 Hole -	4 1/2" Bolt Circle
15" 6 Hole -	5 1/2" Bolt Circle
16" 6 Hole -	5 1/2" Bolt Circle
16.5" 8 Hole -	6 1/2" Bolt Circle
20.5" 5 Hole -	4 1/2" Bolt Circle

CAUTION

Do not mount or attempt to mount anything other than 16.5" tires on 16.5" wheels [rims].

Wheel, Tire, and Hub Care

Since your EZ Loader boat trailer is put in water and put through other severe conditions, it needs more attention to the wheels and its components than your car.

Keep Bearings Lubricated using the Greased Bearing System

WARNING

Since boat trailers wheels are put in water, it is important you check and grease your wheel bearings on a regular basis.

Do not use a power-assisted grease gun to add bearing grease. Caution should be used when adding grease. Using a power-assisted grease gun or over-greasing the bearing protectors can cause the seal to fail.

Hubs must be completely filled with grease in order for the bearing protectors to work properly.

To check your bearings, raise your wheel clear of the road surface [by the procedure indicated in "tire changing"]. With your hands on the outside edges of the tire, try to rock the wheel by pushing on one side and pulling on the other. No noticeable rocking should occur. Spin the wheel and listen for noise or roughness. A smooth, silent operation means that your bearings are in good order. If a grinding sound is heard, contact your EZ Loader Dealer for warranty and/or replacement instructions.

Grease carefully with a hand operated grease gun before launching or storage. Do not add grease when the hub is cold because too much grease flow can damage seals and brake shoes. Do not use a power assisted grease gun.

Hubs must be completely filled with grease in order for the bearing protectors to function properly. Use certified water-proof lithium-based marine trailer bearing grease. DO NOT OVERFILL WITH GREASE.

Some EZ Loader trailers are factory equipped with a bearing protector that uses a spring loaded piston to slowly feed grease through the bearing protector and into the bearings. On these models, this spring is plainly visible to the user. A zirc [grease] fitting is attached to the center of a disc located on the bearing protector. The disc is about the size of a half dollar. As you add grease to the bearing protector through the zirc fitting, the cavity slowly fills up and the disc will start to move towards you as it begins to compress the spring. Stop adding grease when the spring begins to compress and the disc begins to move towards you.

Do not fill the bearing protector until the spring is fully compressed. This can result in damage to the seal, loss of the grease, and potential race, bearing and spindle damage. Periodic checking can be accomplished by simply rocking the disc side to side with your fingers. If the disc is able to rock side to side, it is floating on grease and no more grease needs to be added. If the disc has bottomed out [seated] and cannot be moved, it is time to add more grease using the instructions above.

If you have to remove a greased system bearing protector, lay a block of wood against the side of it and tap the wood with a hammer. Then place the wood on the opposite side and tap again. Continue until you "walk" the protector out of the hub. To install a bearing protector, make sure you have the proper sized bearing protector to match your hub. Then line the protector up with the hub, lay a block of wood over the front of the protector and pound the wood with a hammer. Bearing protectors are designed to fit tightly into the hub, so be sure it is carefully aligned before striking the wood.

Note: Bearing Protectors are not a replacement for proper bearing maintenance.

Keeping Bearings Lubricated Using the Oil Bath Lubrication System

WARNING

Since Boat Trailers wheels are put in water, it is important you check your bearings and oil level and oil condition in your oil bath hubs on a regular basis.

Hubs must be filled to the level Indicated on the sight glass for proper bearing protection.

To check your bearings, raise your wheel clear of the road surface [by the procedure indicated in "tire changing"]. With your hands on the outside edges of the tire, try to rock the wheel by pushing on one side and pulling on the other. No noticeable rocking should occur. Spin the wheel and listen for noise or roughness. A smooth, silent operation means that your bearings are in good order. If a grinding sound is heard, contact your EZ Loader Dealer for warranty and/or replacement instructions.

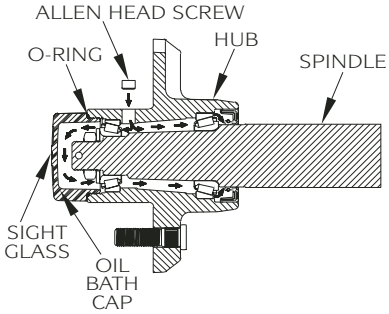

Fig. 17: Oil Bath Hub Lubrication System.

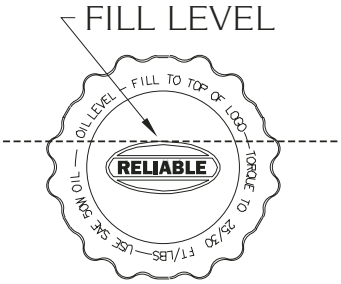

Fig. 18: Fill oil level to top of logo as indicated.

With the Oil Bath Lubrication System, oil is applied through a hole located in the side of the hub. The hole is found by removing the zinc-plated brass Allen head screw from the side of the hub using a 3/16th Allen wrench. The oil is filled through the hole until it reaches the top of the Reliable logo found on the sight glass in the oil bath cap. [See Figure 18] If the cap has to be removed it can be unscrewed using the correct sized socket as shown in Figure 19. When reinstalling the oil bath cap check the condition of the o-ring, replace if necessary, and torque the oil bath cap to 25-30 ft. lbs. [see Fig. 19]

SAE 50W or 90W gear oil can be used in the oil bath hub and can be mixed if necessary. It is normal for the oil to turn dark after very little use. If the oil turns milky or light colored, water has entered the hub and the oil should be drained and replaced. The oil is drained by removing the Allen head screw from the fill hole and draining. Do not drain oil onto the ground. The drained oil should be properly disposed of. After adding new oil, replace the Allen head screw using a 3/16th inch Allen wrench. Do not over-tighten.

Note: Bearing Lubrication Systems are not a replacement for proper bearing maintenance.

Oil Bath Lubrication System

Lug Bolts/Nuts per Wheel	O-ring #	Cap Socket Size	Replacement Cap #	Torque Specifications
All 5 Lug Wheels	250-029201	2 3/8" 6 point	250-029202	25-30 ft. lbs.
All 6 Lug Wheels	250-029203	2 7/8" 6 point	250-029204	25-30 ft. lbs.

Fig. 19:

Changing or Adjusting Bearings

WARNING

Make sure the trailer is not allowed to move. Attach it to the tow vehicle and block the tires.

The trailer wheel bearings have been torqued at the factory. However, if the bearings need adjustment, follow the method explained below or have your EZ Loader Dealer do the work. EZ Loader recommends you check the bearing adjustment every 2,000 miles or before every season, whichever is less.

Make sure the trailer is properly secured against moving, attach it to the tow vehicle and block the tires. Place the jack under the axle or under the frame near the axle [please see the proper jack locations listed under "Jack Placement" on page 24]. Jack up the side of your trailer and remove the bearing protector or oil bath cap, cotter pin and spindle nut retainer. To tighten the spindle nut, tighten [pre-load] the spindle nut to 30 foot pounds while turning the hub. Back the spindle nut off. While backing off, do not disturb the hub. Then retighten the spindle nut using a torque wrench to 18-24 inch lbs. [finger tight, do not over-tighten]. When the nut is tightened and positioned properly, the wheel should turn easily with no hub play when you rock the tire [side-to-side movement].

To replace the nut retainer, put it over the nut so that the cotter pin can be put in the spindle hole without loosening or tightening the nut. Rock the tire to check the hub play, check tightness, and loosen or tighten as needed. Put the cotter pin in the hole, bend the ends of the cotter pin and put on the bearing protector or oil bath cap.

With a greased bearing system, add grease to the bearing protector until you begin to see the spring compress, as described in the section Keeping Bearings Lubricated using the Greased Bearing System on page 25. DO NOT OVERFILL WITH GREASE.

With an Oil Bath Lubrication System, add oil to the level indicated on the sight glass as described in Keeping Bearings Lubricated using the Oil Bath Lubrication System on page 26.

WARNING

Unlubricated or dry wheel bearings may cause serious damage. Unlubricated or dry wheel bearings will cause the wheel to make a lot of noise. The wheel and hub can separate from the trailer if it is driven in an unlubricated or dry condition.

Check your wheel bearings often during times of heavy usage and/or salt water applications.

WARNING

Grease or oil on the trailer brakes can cause the brakes not to work correctly.

Check Wheel Bearing Seals

It is normal to see a film of grease or oil around the seal area, so a slight amount of leakage will not hurt, but if the seal leaks excessively, it should be replaced by an EZ Loader Dealer.

If you are adding a lot of grease or oil to the hub under normal usage, the seal is probably leaking and you should have the seal checked right away by an authorized EZ Loader Dealer. EZ Loader recommends wheel bearings be inspected and seals replaced when your boating season is over or before the trailer is put in storage.

Definitions

Aft: A nautical expression referring to the back area of a boat.

Actuator: See 'Trailer Actuator'

Anchor Chock: A bracket or roller usually mounted on the front of the boat and often sticking forward past the bow of the boat.

Back-up Solenoid: An electrical solenoid used on brake actuators for trailers with disc brakes that allows the trailer to be backed up on level ground without the brakes locking up.

Bearing Protector: A device that is installed on the hub that allows lubrication of the bearings.

Boat Bow Safety Chains: Safety chain[s] attached to the winch stand of the trailer and hooked onto the bow eye of the boat as a safety precaution. [See Safety Chains]

Boat Strakes: Small ribs on the underside of the boat running fore and aft, visible from the underside of the boat.

Boom: The main frame members that run fore and aft on the trailer.

Bow: The front tip of the boat.

Bilge Pump: A pump used to remove unwanted water from the bilge [the lower part of the boat.]

Bow Eye Length: A measurement taken from the transom to the bow eye for purposes of determining trailer length and winch stand placement.

Bow Pulpit: A small platform sticking forward past the tip of the bow of the boat.

Bow Stop Roller: A roller on the trailer's winch stand that the bow of the boat rests against.

Brackish Water: Polluted water or mixed freshwater and saltwater.

Brake Controller: An electrical brake controller mounted inside the cab of the tow vehicle that lets you manually activate the brakes and also houses the inertia sensing device. [See 'Inertia Sensing Device'].

Brake Flush Kit: A garden hose adapter kit that attaches to drum brakes that allows fresh water to be flushed into the drum brakes to rinse out salt water, brackish water or small debris.

Bunks: Generally either made of wood covered with carpet or aluminum with a plastic like surface. Provides the main support under the boat's hull while on a bunk style trailer.

Channel Glide Bunk Covers: A slippery channel shaped plastic like material that goes over the existing wood bunk to make launching and loading the boat easier by reducing friction between the boat and the carpeted bunk. Recommended for aluminum boats only.

Coupler: See 'Trailer Coupler'.

Coupler Locking Device: A lock or small nut & bolt put through the locking hole on the latch of the coupler that helps to prevent the coupler from coming off the hitch ball.

Coupler Safety Chains: Safety chains running from the coupler or actuator area on the trailer to the hitch area of the tow vehicle.

Fishtailing: The boat and trailer swaying from side to side while being towed.

Fore: A nautical term referring to the front area of the boat.

Gross Vehicle Weight: The actual combined weight of the trailer, boat with motor, fuel and gear.

Gross Vehicle Weight Rating [GVWR]: The maximum allowable combined weight of the trailer, boat, motor, fuel and gear.

Hitch Ball: The ball shaped part of the hitch on the rear of the tow vehicle used to connect to the trailer.

Hydraulic Surge [disc brakes]: Disc brakes on the trailer using the hydraulic surge method to apply the brakes.

Hydraulic Surge [drum brakes]: Drum brakes on the trailer using the hydraulic surge method to apply the brakes.

Inertia Sensing Device: This is part of an electrical unit used with electric brakes that senses the vehicle slowing down and activates the trailer brakes automatically. It is generally mounted inside the cab of the tow vehicle. [see 'Brake Controller']

Keel: The fore and aft center line of the boat, the lowest point of the hull on a V-bottomed boat.

Launch Position: Having the trailer deep enough in the water that if the boat were launched it would have enough water to support the boat without making contact with the ground or cause any damage.

Load Guides: Attachments to the side of the trailer that have rollers, bunks or PVC tubes that are near the side of the boat to assist in keeping the boat centered on the trailer while loading or launching.

Mooring Line: A rope or line attached to the bow of the boat so that a person has control of the boat after it is launched off of the trailer.

Port: A nautical directional term for left or left side.

Roller Pattern: The spacing the rollers have on the underside of the boat on roller trailers.

Rollers: Round cylindrical rolls that support the boat and roll when the boat is being launched or loaded on a roller style trailer.

Safety Chains: A general term used to describe either the safety chains located on the winch stand that attach to the bow eye of the boat, or located near the coupler or actuator and attach near the hitch area on the tow vehicle.

Saltwater: Water with salt content in it.

Side Rollers: Refers to roller style load guides. [See Load Guides]

SpindleNut: The nut that threads onto the spindle of the axle.

Spindle Nut Retainer: A steel cap that fits over the spindle nut used in conjunction with a cotter pin to keep the spindle nut from unscrewing.

Starboard: A nautical directional term for right or right side.

Stern: A nautical expression referring to the back end of the boat.

Tie-downs: A securing device that attaches to or near the rear transom of the boat and downward to the trailer to help secure the back end of the boat to the trailer.

Tongue: The most forward portion of the trailer that has the coupler or actuator attached to it.

Tongue Weight: The amount of weight the tongue is carrying if weighed at the actuator or coupler.

Torsion Axle Trailer: A trailer using torsion as a means of suspension rather than leaf springs.

Tow Vehicle: The vehicle that pulls the boat and trailer.

Trailer Actuator: The part of the trailer that is bolted or welded to the tip of the tongue of the trailer that houses the hydraulic reservoir and several other components of a hydraulic brake system. This also is the part that attaches to the hitch ball on the tow vehicle.

Trailer Coupler: The part of the trailer that is bolted or welded to the tip of the tongue of the trailer and attaches to the hitch ball of the tow vehicle.

Trailer Tongue: See "Tongue".

Transom: The near vertical rear end of the boat where the outboard motor is generally attached, or the lower unit of the inboard outboard motor is generally attached.

Transom Drain Plugs: Plugs in the lower rear transom area that when removed will drain excess water from the boat after the boat is out of the water on the trailer. Drain plugs must be kept in the transom drain plug holes whenever the boat is in the water.

Vee Block: A 'V' shaped block on the trailer's winch stand that the bow of the boat rests against.

Weight Carrying Hitch: A hitch that supports some of the weight of the boat and trailer.

Weight-distributing Hitch: A hitch that distributes some of the weight of the boat and trailer into the frame of the tow vehicle.

Winch Latch Assembly: A latch assembly located on the trailer winch that switches the winch from a 'reel-in' condition to a 'reel-out' or a 'neutral free-wheeling' condition.

Winch Safety Chains: See 'Boat Bow Safety Chains'

Winch Strap/Cable: A cable or strap attached to the trailer winch used in loading, launching and securing of the boat.

60 degree Cone Angle Zinc Plated Lug Bolts: A 60 degree lug bolt used to attach the wheel to the hub or drum on a trailer.

TWO YEAR LIMITED WARRANTY

E Z Loader Boat Trailers, Inc., warrants each new **E Z Loader Boat Trailer** to be free from defects in materials and workmanship for a period of two (2) years from date of purchase. E Z Loader shall repair or replace, without charge, any parts found to be defective because of imperfect workmanship or materials, within a reasonable time after the trailer is returned at purchaser's expense to any **E Z Loader** authorized distributor or dealer. Who is Covered: This warranty is extended to the original purchaser only and does not extend to any other persons to whom the trailer may be transferred. What is Not Covered: Provisions of this Warranty shall not apply to any product which is found to have been modified or altered in any way; nor shall the warranty apply to any defect or malfunction which was caused by damage, unreasonable use, or failure to provide reasonable and necessary maintenance. The warranty will not cover damage caused by overloading the trailer beyond stated capacities, improper adjustment of the trailer to the boat or the use of weight distribution hitches in conjunction with hydraulic surge brakes. Due to the highly corrosive conditions a trailer is exposed to, rust formation is not covered. The warranty does not cover winches, lights, couplers, actuators, brakes, tongue jacks, springs and tires or wheels, as these items are warranted separately by their manufacturer. Other Limitations: Races, bearings and seals are covered for 90 days from date of purchase. Any implied warranties, obligations, or liabilities, including but not limited to, any implied warranty of merchantability, shall be limited in duration to the two–year duration of this written limited warranty. Some states do not allow limitation on how long an implied warranty lasts, so the above limitation may not apply to you. The use of any unit as part of a rental fleet, or use for commercial purposes, voids this warranty. The following are exclusions of **E Z Loader** warranty: Loss of time, inconvenience, towing charges, travel expenses, lodging, telephone, gas, loss or damages to personal property or loss of wages. This warranty is intended to comply with the "Magnusson–Moss Warranty Federal Trade Commission Improvement Act" and any provisions of this warranty or actions taken by **E Z Loader** pursuant to this warranty shall be construed accordingly. **E Z Loader Boat Trailers, Inc**., shall not be liable for any incidental or consequential damages for breach of this or any other warranty, express or implied. Some states do not allow the exclusion of limitation of incidental or consequential damages, so the above limitation or exclusion may not apply to you.

This warranty gives you specific legal rights, and you may also have other rights which vary from state to state.

Warranty Registration

Fill out and mail the Warranty Registration Card if the dealer has not already done it – or complete the Warranty Registration Card online at www.ezloader.com. Having this card on file will speed up the process if you have a problem, need replacement parts, or if we need to contact you with important information about your trailer. Using the Vehicle Identification Number we can look up the registration which has the information we would need to make sure that you get the right parts for your trailer. Please ask your EZ Loader Dealer or give us a call if you have any questions regarding the Warranty Card. Keep the upper portion of the card for your records and send in the lower half to either the following applicable addresses:

Adjustable Trailers
New Owner Warranty Registration
EZ Loader Boat Trailers
PO Box 3263
Spokane, Washington 99220-3263
509-489-0181

Custom Welded Trailers
New Owner Warranty Registration
EZ Loader Midway Division
PO Box 270
6533 Hwy 126N
Midway, AR 72651
870-481-5138

Warranty Questions

If your EZ Loader boat trailer doesn't live up to our warranty, we want to make it right. Discuss the problem first with your EZ Loader Dealer. In most cases, a satisfactory solution can be resolved.

If not, contact the official EZ Loader Distributor in the territory that you bought the trailer. When contacting the Distributor about your trailer, please indicate the information located on your trailer data plate [serial number, model, capacity, etc.] and your name, phone number and address.

Manufacturers of marine products are required to keep current owner registration lists. If there is a safety modification or product recall, we will be able to notify you accordingly.

Please send in your warranty card (or complete it online) promptly after purchase.

Contact Information

Questions, or Comments may be Directed to:

Customer Service Department
EZ Loader Boat Trailers, Inc.
P.O. Box 3263
Spokane WA 99220-3263

or contact us by email:

Sales/Customer Service
salesinfo@ezloader.com

Parts
partsinfo@ezloader.com

E-store
www.ezloader.com

Reporting Safety Defects

Manufacturer:
EZ Loader Boat Trailers, Inc.
P. O. Box 3263
Spokane, WA 99220-3263

If you believe that your vehicle has a defect which could cause a crash or could cause injury or death, you should immediately inform the National Highway Traffic Safety Administration [NHTSA] in addition to notifying EZ Loader Boat Trailers.

If NHTSA receives similar complaints, it may open an investigation, and if it finds that a safety defect exists in a group of vehicles, it may order a recall and remedy campaign. However, NHTSA cannot become involved in individual problems between you, your dealer, or EZ Loader Boat Trailers.

To contact NHTSA, you may either call the Auto Safety Hotline toll-free at 1-800-424-9393 [or 366-0123 in Washington D.C. area] or write to:

NHTSA
U.S. DEPARTMENT of TRANSPORTATION
400 7TH Street SW, [NSA-11]
Washington, DC 20590

You can also obtain other information about motor vehicle safety from the Hotline.

For your records, please fill in the following information.
It is important for future part or service requests.

Model Year _____

Model Number _____

Serial Number _____

Dealer Name _____

Dealer Address _____

Dealer Telephone _____

Date Purchased _____

If you sell your trailer: This manual must be transferred to the new owner. At the transaction, the original owner should photocopy this page, along with the name and address of the new owner, and send it to:

Adjustable Trailers
New Owner Warranty Registration
EZ Loader Boat Trailers
PO Box 3263
Spokane, Washington 99220-3263
509-489-0181

Custom Welded Trailers
New Owner Warranty Registration
EZ Loader Midway Division
PO Box 270
6533 Hwy 126N
Midway, AR 72651
870-481-5138

Original Owner _____

Address _____

City, State, Zip _____

New Owner _____

Address _____

City, State, Zip _____

Important Notice

Laws regarding towing and trailers vary from state to state, so make sure you are in full compliance with the law in your area regarding trailer brakes, coupler requirements, safety chains, trailer width requirements, trailer lights, etc. Contact your state motor vehicle department for more information. In addition, check with your automotive dealer or vehicle's owner's manual to make sure you have the proper towing vehicle, hitch and ball for the load you'll be pulling.

DISTRIBUTOR LOCATIONS

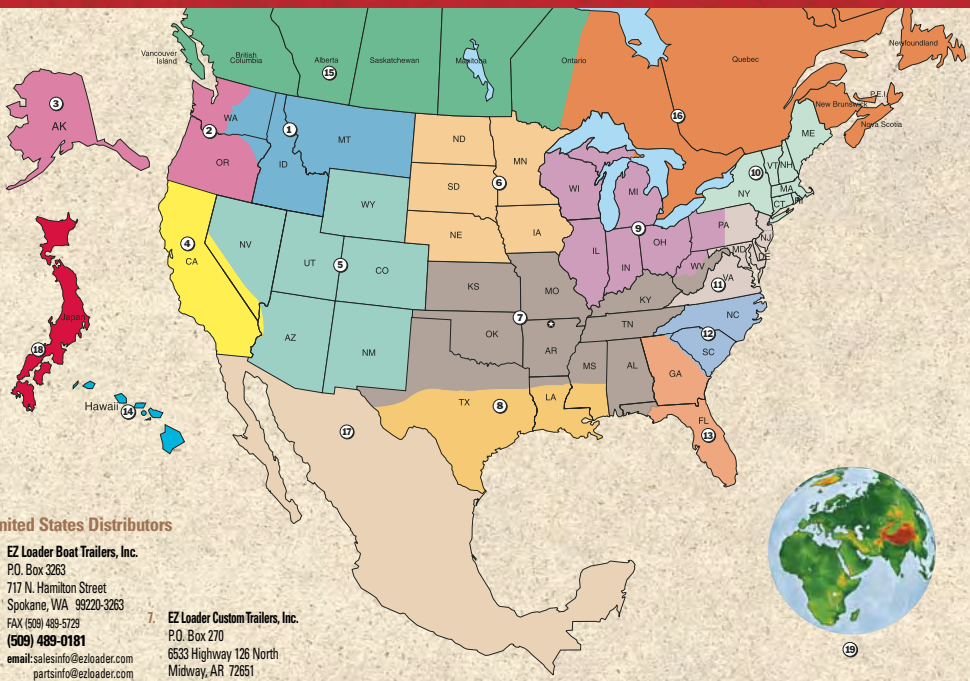

United States Distributors

1. **EZ Loader Boat Trailers, Inc.**
P.O. Box 3263
717 N. Hamilton Street
Spokane, WA 99220-3263
FAX (509) 489-5729
(509) 489-0181
email: salesinfo@ezloader.com
partsinfo@ezloader.com
web: www.ezloader.com

2. **EZ Loader Northwest**
21424 87th Avenue S.E.
Woodinville, WA 98072
FAX (360) 668-3408
(360) 668-3517

EZ Loader Northwest
Portland, OR
FAX (360) 668-3408
(360) 668-3517

3. **EZ Loader Northwest**
21424 87th Avenue S.E.
Woodinville, WA 98072
FAX (360) 668-3408
(360) 668-3517

4. **EZ Loader Southwest**
4518 Kilzer Avenue
McClellan, CA 95652
FAX (916) 646-0496
(916) 646-0494 or
(509) 489-0181

5. **For Information Contact:**
EZ Loader Boat Trailers, Inc.
Dealer Opportunities Available
(509) 489-0181

6. **EZ Loader North Central**
708 Hwy 75 S
Wheaton, MN 56296
FAX (574) 266-5757
(574) 266-0092
(800) 323-8190
email: eznc@ezloader.com

7. **EZ Loader Custom Trailers, Inc.**
P.O. Box 270
6533 Highway 126 North
Midway, AR 72651
FAX (870) 481-5264
(870) 481-5138
email: ezmid@ezloader.com

8. **Sun Belt Marine, Inc.**
2716 Spence Street
Lufkin, TX 75904
FAX (936) 632-4350
(936) 632-6673
email: ezldr@lcc.net

9. **EZ Loader Midwest**
125 Belvedere Rd.
Elkhart, IN 46514
FAX (574) 266-5757
(574) 266-0092
(800) 323-8190
email: ezmw@ezloader.com

10. **Barrett Marketing Group, Ltd.**
150 Colburne St. E.
Lindsay, ON
Canada K9V 6K4
FAX (705) 324-1527
FAX (800) 417-8208
(705) 324-4499
(800) 668-3481
email: bmgontario@barrettcorp.com
web: www.bmgsport.com

11. **EZ Loader Mid-Atlantic Division**
9 Anchor Business Centre
Deale, MD 20751
FAX (410) 867-9431
(410) 867-3926
(888) 667-3926

12. **Jim Huntley & Associates**
349 Wilshire Avenue S.W.
Concord, NC 28025
FAX (704) 784-2403
(704) 784-4420
email: jhuntley@ctc.net

13. **EZ Loader Southeast Division**
1462 N.W. Commerce Center Pkwy
Port St. Lucie, FL 34986-3296
FAX (772) 465-0102
(772) 465-7778
email: jvassallo@ezloader.com

14. **Windward Boats, Inc.**
789 Kailua Road
Kailua, HI 96734
FAX (808) 263-3302
(808) 263-6030
web: www.windwardboats.com

Canadian Distributors

15. **Barrett Marketing Group, Ltd.**
201-26229 Twp Rd 531A
Acheson, AB
Canada T7X 5A4
FAX (780) 962-5155
(780) 962-8200
(800) 661-9632

Barrett Marketing Group, Ltd.
19757 92A Avenue
Langley, B.C.
Canada V1M 3B3
FAX (604) 888-3013
(604) 888-4044
(800) 326-3034
email: bpettit@barrettcorp.com

Barrett Marketing Group, Ltd.
Unit #4 -275 De Baets St.
Winnipeg, Manitoba
Canada R2J 4A8
FAX (204) 669-7365
(204) 669-7007
(800) 382-0668
web: www.barrettcorp.com

16. **Barrett Marketing Group, Ltd.**
150 Colburne St. E.
Lindsay, ON
Canada K9V 6K4
FAX (705) 324-1527
FAX (800) 417-8208
(705) 324-4499
(800) 668-3481
email: bmgontario@barrettcorp.com
web: www.bmgsport.com

Foreign Distributors

17. **For Information Contact:**
EZ Loader Boat Trailers, Inc.
Dealer Opportunities Available
(509) 489-0181
email: sales@ezloader.com

18. **Ram Associates Corp.**
4-10-7 Omachi Kamakura
Kanagawa 248
Japan
FAX 0467-24-2012
0467-22-5245

19. **For Information Contact:**
EZ Loader Boat Trailers, Inc.
Distributor Opportunities Available
(509) 489-0181
email: rnorman@ezloader.com

Custom Trailer Division

✪ **EZ Loader Custom Trailers, Inc.**
P.O. Box 270
6533 Highway 126 North
Midway, AR 72651
FAX (870) 481-5264
(870) 481-5138
email: ezmid@ezloader.com

VISIT US ON THE WEB
at www.ezloader.com

EZ LOADER BOAT TRAILERS

P. O. Box 3263 • Spokane, WA 99220-3263 USA • (509) 489-0181

NMMA CERTIFIED

© 2004 EZ Loader Boat Trailers