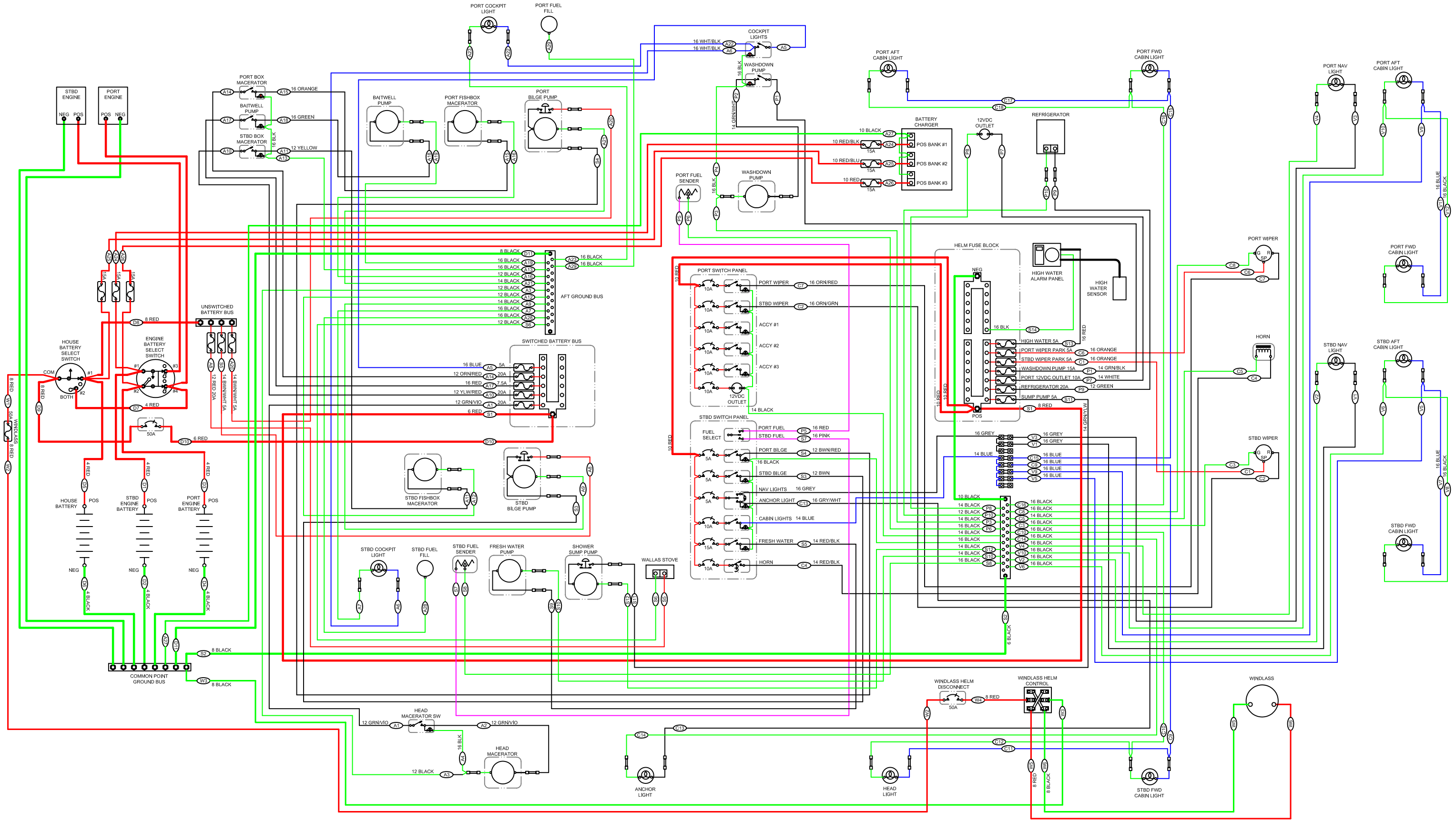

REVISION - 6 MARCH 2007
STBD BILGE WIRE S3 WAS BROWN/WHITE
WIRE A8 FROM INSWITCH BUS WAS WIRED TO STBD BILGE - WIRE S5 FROM UNSWITCHED BUS WAS WIRED TO WALLAS STOVE
REVISION 8 AUG 2007 - PANEL FEEDER WIRES S1, D10 AND S2 WERE 8 AWG
BILGE PUMP CIRCUIT BREAKERS AND FUSES WERE 7.5 A
REVISION 13 AUG 2007 - ADDED WIRES S13 AND S14 - ADDED HIGH WATER ALARM PANEL

TITLE
25 TOMCAT DC SCHEMATIC

DRAWN BY: T. BROSCHART

DATE: 21 SEPT 2006

SCALE: SMALLER THAN ACTUAL SIZE

CORY MARINE GROUP
25 37th STREET NE / AUBURN, WA 98002 / (253) 839-0222